THE HEFFERNAN GROUP
P.O. Box 1180
Surrey Hills North VIC 3127
Phone 03 9836 5021
info@theheffernangroup.com.au
www.theheffernangroup.com.au

SPECIALIST MATHS UNITS 3 & 4 TRIAL EXAMINATION 2 SOLUTIONS 2025

SECTION A – Multiple-choice answers

1.	C	**6.**	B	**11.**	B	**16.**	D
2.	B	**7.**	D	**12.**	C	**17.**	C
3.	D	**8.**	D	**13.**	A	**18.**	A
4.	A	**9.**	A	**14.**	C	**19.**	C
5.	D	**10.**	A	**15.**	B	**20.**	C

SECTION A - Multiple-choice solutions

Question 1

Checking all possible answers:

Option A: $(-2)^2 \geq -2$

$4 \geq -2$ which is true.

Option B: $0^2 \geq 0$ which is true.

Option C: $\left(\frac{1}{2}\right)^2 \geq \frac{1}{2}$

$\frac{1}{4} \geq \frac{1}{2}$ which is not true.

The answer is C.

Checking Option D doesn't work:

$\left(\frac{3}{2}\right)^2 \geq \frac{3}{2}$

$\frac{9}{4} \geq \frac{3}{2}$ which is true.

Question 2

The converse of a statement is obtained by simply switching the hypothesis and conclusion.

For the given statement, the hypothesis is 'if *m* and *n* are odd' and the conclusion is 'then *mn* is odd'.

Switching these two gives us if *mn* is odd, then *m* and *n* are odd.

The answer is B.

Question 3

Sketch the graph on the CAS to help determine key features.

The graph has exactly one horizontal asymptote ($y = 0$). Although the graph approaches this asymptote on either side of line depending on whether $x \to \infty$ or $x \to -\infty$, it is still one horizontal asymptote. The answer is not A.

The graph has two vertical asymptotes at $x = 0$ and $x = 4$. The answer is not B.

The graph has one minimum stationary point at $(-5.57, -0.36)$ (to two decimal places).
If it is difficult to ascertain this minimum stationary point on the graph, students can solve the derivative equal to 0 and will find one point. This can then be verified to be a minimum.
The answer is not C.

Hence, the answer is D.

Checking D – we can solve the second derivative equal to 0 to find that there is a potential point of inflection at $x = -10.41$ and $x = 1.25$ (to two decimal places). A quick check for a change in concavity either side of these *x*-values will show that they are both points of inflection.

Question 4

$$\int_0^{2\pi} \sin^3\left(\frac{x}{8}\right) dx$$
$$= \int_0^{2\pi} \sin^2\left(\frac{x}{8}\right)\sin\left(\frac{x}{8}\right) dx$$
$$= \int_0^{2\pi} \left(1-\cos^2\left(\frac{x}{8}\right)\right)\sin\left(\frac{x}{8}\right) dx$$

Let $u = \cos\left(\frac{x}{8}\right)$,

$$\therefore \frac{du}{dx} = -\frac{1}{8}\sin\left(\frac{x}{8}\right)$$

And when $x = 0$, $u = \cos\left(\frac{0}{8}\right) = 1$ and when $x = 2\pi$, $u = \cos\left(\frac{2\pi}{8}\right) = \cos\left(\frac{\pi}{4}\right) = \frac{\sqrt{2}}{2}$.

$$\therefore \int_0^{2\pi} \left(1-\cos^2\left(\frac{x}{8}\right)\right)\sin\left(\frac{x}{8}\right) dx$$
$$= \int_0^{2\pi} \left(1-u^2\right) \times \frac{du}{dx} \times -8\, dx$$
$$= -8\int_1^{\frac{\sqrt{2}}{2}} 1-u^2\, du$$
$$= 8\int_1^{\frac{\sqrt{2}}{2}} u^2 - 1\, du$$

The answer is A.

Question 5

Lines are concurrent if they all intersect at the same point.

Firstly, we find the point of intersection of the lines $\underset{\sim}{r}_1(t)$ and $\underset{\sim}{r}_2(s)$:

$$\begin{aligned} -2+t &= -3-2s \\ 1+2t &= 2+s \\ 3+3t &= 6+4s \end{aligned}$$

Solving for t and s gives $t=\frac{1}{5}$ and $s=-\frac{3}{5}$.

Substituting either of these into their equivalent line equation, e.g. $\underset{\sim}{r}_1\left(\frac{1}{5}\right)$ gives the point of intersection $\left(-\frac{9}{5},\frac{7}{5},\frac{18}{5}\right)$.

We can now find the value of u for line $\underset{\sim}{r}_2(u)$ so that it goes through the point $\left(-\frac{9}{5},\frac{7}{5},\frac{18}{5}\right)$.

Equating $\underset{\sim}{i}$ components:

$$\begin{aligned} 1+2u &= -\frac{9}{5} \\ u &= -\frac{7}{5} \end{aligned}$$

Note: The same value is found equating $\underset{\sim}{j}$ components.

Therefore, equating $\underset{\sim}{k}$ components:

$$\begin{aligned} -1+cu &= \frac{18}{5} \\ -1+c\times-\frac{7}{5} &= \frac{18}{5} \end{aligned}$$

Solving for c:

$$c=-\frac{23}{7}$$

The answer is D.

Question 6

The cross product has the distributive property, such that

$$\begin{aligned}(\mathbf{a}+\mathbf{b})\times(\mathbf{a}-\mathbf{b}) &= \mathbf{a}\times\mathbf{a}-\mathbf{a}\times\mathbf{b}+\mathbf{b}\times\mathbf{a}-\mathbf{b}\times\mathbf{b} \\ &= \mathbf{0}+\mathbf{b}\times\mathbf{a}+\mathbf{b}\times\mathbf{a}+\mathbf{0} \qquad \text{(since } -\mathbf{a}\times\mathbf{b}=\mathbf{b}\times\mathbf{a}\text{)} \\ &= 2(\mathbf{b}\times\mathbf{a})\end{aligned}$$

The answer is B.

Question 7

By definition, two vectors are linearly <u>dependent</u> if and only if they are parallel, meaning $\mathbf{a}=k\mathbf{b}$ for a <u>non-zero</u> value of k.

Re-arranging $(2x-3)\mathbf{a}+(3y+8)\mathbf{b}=\mathbf{0}$ gives us $(2x-3)\mathbf{a}=-(3y+8)\mathbf{b}$.

By inspection, we can see that it does not matter what values of x and y we pick, we will be able to get a non-zero constant k.

For example, if $x = 5$ and $y = 10$, $7\mathbf{a}=-38\mathbf{b} \Rightarrow \mathbf{a}=-\frac{38}{7}\mathbf{b}$.

It is only if $x=\frac{3}{2}$ and $y=-\frac{8}{3}$ do we end up with k being 0, which does not meet the criteria for a set of linearly dependent vectors, hence they must be linearly independent.

The answer is D.

Question 8

The scalar resolute of $\mathbf{a}$ in the direction of $\mathbf{b}$ is $\frac{\mathbf{a}\cdot\mathbf{b}}{|\mathbf{b}|}$.

$$\mathbf{a}\cdot\mathbf{b}=-1\times1+4\times-9+2\times-2=-41$$
$$|\mathbf{b}|=\sqrt{1^2+(-9)^2+(-2)^2}=\sqrt{86}$$

Therefore the scalar resolute is $-\frac{41}{\sqrt{86}}=-\frac{41\sqrt{86}}{86}$.

The answer is D.

Question 9

Given $z = b - bi$,

$$\text{Arg}(z) = \tan^{-1}\left(\frac{-b}{b}\right) = -1$$

$$\therefore \text{Arg}(z) = -\frac{\pi}{4} \quad \text{, given } z \text{ is in quadrant 4.}$$

Therefore using De Moivre's Theorem, the Argument of $z^n = -\frac{n\pi}{4}$.

For z^n to be purely imaginary, the argument needs to be $.....,-\frac{3\pi}{2},-\frac{\pi}{2},\frac{\pi}{2},\frac{3\pi}{2},.....$

$$\begin{aligned}
\therefore \quad -\frac{n\pi}{4} &= \frac{\pi}{2} + m\pi \quad , m \in Z \\
-\frac{n}{4} &= \frac{1}{2} + m = \frac{2m+1}{2} \\
-n &= 4m + 2 \\
n &= -4m - 2 \\
&= 4(-1-m) + 2 \\
&= 4k + 2 \quad , \ k \in Z \qquad \text{(where } k = -1 - m\text{)}
\end{aligned}$$

The answer is A.

Question 10

The ray $\text{Arg}(z) = \dfrac{\pi}{3}$ is the straight line with equation $y = \sqrt{3}x$ for $x > 0$ and

$\text{Arg}(z-1) = \dfrac{2\pi}{3}$ is the ray extending from the origin at angle of $\dfrac{2\pi}{3}$, but translated right one unit and hence has the equation $y = -\sqrt{3}x + \sqrt{3}$ for $x < 1$.

Both are shown on the diagram below.

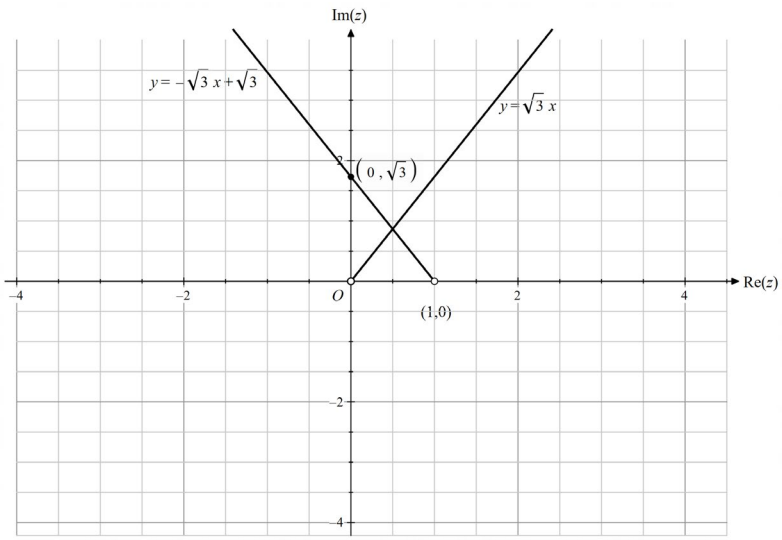

Using the CAS to find the point of intersection of these two lines, we get $\left(\dfrac{1}{2}, \dfrac{\sqrt{3}}{2}\right)$.

The answer is A.

Question 11

Given $z = x + yi$, then

$$\begin{aligned} z - \frac{1}{\bar{z}} &= x + yi - \frac{1}{x - yi} \\ &= x + yi - \frac{1}{x - yi} \times \frac{x + yi}{x + yi} \\ &= x + yi - \frac{x + yi}{x^2 + y^2} \\ &= \left(x - \frac{x}{x^2 + y^2} \right) + \left(y - \frac{y}{x^2 + y^2} \right) i \end{aligned}$$

Note: the CAS should be used to complete the above steps more efficiently.

For $z - \frac{1}{\bar{z}}$ to be purely imaginary, $x - \frac{x}{x^2 + y^2}$ must equal zero, which is only true if $x^2 + y^2 = 1$.

Given $|z| = \sqrt{x^2 + y^2}$, then $|z| = 1$.

The answer is B.

Note: Option D is incorrect, as if $z^2 = 1$, $z = \pm 1$ which gives us $|z| = 1$, however $x, y \in R \setminus \{0\}$, therefore $z \neq \pm 1$.

Question 12

Given $y = x\cos(2x)$, using the CAS,

$$\frac{dy}{dx} = -2x\sin(2x) + \cos(2x) \text{ and } \frac{d^2y}{dx^2} = -4x\cos(2x) - 4\sin(2x).$$

$$\begin{aligned} \therefore \frac{d^2y}{dx^2} + 4y &= -4x\cos(2x) - 4\sin(2x) + 4x\cos(2x) \\ &= -4\sin(2x) \end{aligned}$$

The answer is C.

Question 13

On the slope field, we can see that the gradient is undefined for $x = -1$, which means the answer is either option A or C. In quadrant one, the gradient is positive, which still means option A and C are possible, however in quadrant four, when $y < 0$, the gradient is positive. This rules out option C.

The answer is A.

Question 14

It is recommended to use an Euler function or program on your CAS with $h = -0.1$, however the technique by hand is also shown below for your reference.

Given $x_0 = 1$ and $y_0 = 1$.

Using $h = -0.1$, as step size given is 0.1, however we are after $y(0.8)$ so are required to step 'back' twice.

$$x_1 = 0.9$$

$$\begin{aligned} y_1 &= y_0 + h \times \frac{dy}{dx} \text{ at the point } (x_0, y_0) \\ &= 1 - 0.1 \times \frac{\log_e(1)}{1} \\ &= 1 \end{aligned}$$

$$x_2 = 0.8$$

$$\begin{aligned} y_2 &= y_1 + h \times \frac{dy}{dx} \text{ at the point } (x_1, y_1) \\ &= 1 - 0.1 \times \frac{\log_e(0.9)}{1} \\ &= 1.011 \end{aligned}$$

The answer is C.

Question 15

Let $x = 3\sin(2t)$ and let $y = 4\cos(4t)$.

$\therefore \ \dfrac{x}{3} = \sin(2t)$ and $\dfrac{y}{4} = \cos(4t)$

$\dfrac{x^2}{9} = \sin^2(2t)$ and $\dfrac{y}{4} = 1 - 2\sin^2(2t)$ using $\cos(2t) = 1 - 2\sin^2(t)$

Substitute $\dfrac{x^2}{9} = \sin^2(2t)$ into $\dfrac{y}{4} = 1 - 2\sin^2(2t)$ gives

$$\frac{y}{4} = 1 - 2\left(\frac{x^2}{9}\right)$$

$$\therefore y = 4 - \frac{8x^2}{9}$$

The answer is B.

Question 16

The total distance travelled by the body is the area under the velocity-time graph for $t \in [0,10]$.

To save time in determining the *t*-intercept and potential issues with positive and negative values of integrals, we can use the modulus function to determine the distance travelled:

distance travelled = $= \displaystyle\int_0^{10} \left| -\frac{1}{4}(t-3)^2 + 4 \right| dt = 31.7$ metres.

Alternatively, some students may split the area up into two parts (above and below the *t*-axis) and subtract the integral below the *t*-axis:

Solve $0 = \dfrac{-1}{4}(t-3)^2 + 4$ to find *t*-intercepts gives needed *t*-intercept of 7.

$$\therefore \text{ distance travelled } = \int_0^7 \frac{-1}{4}(t-3)^2 + 4 \, dt - \int_7^{10} \frac{-1}{4}(t-3)^2 + 4 \, dt$$
$$= 31.7 \text{ metres}$$

The answer is D.

Question 17

The range of $g(x) = \tan^{-1}(x)$ is $\left(-\frac{\pi}{2}, \frac{\pi}{2}\right)$ and $g(x)$ has one x-intercept.

The dilation from the x-axis by a factor of a gives a range of $\left(-\frac{\pi a}{2}, \frac{\pi a}{2}\right)$.

The value of b does not affect the number of x-intercepts as it translates the graph left/right.

If $c \geq \frac{\pi a}{2}$, this will shift the lower horizontal asymptote to the x-axis or above, and hence give the graph no x-intercept. This is also the case if the graph is shifted down by at least $\frac{\pi a}{2}$, i.e. if $c \leq -\frac{\pi a}{2}$.

Therefore, the graph will have one x-intercept provided $c \in \left(-\frac{\pi a}{2}, \frac{\pi a}{2}\right)$.

The answer is C.

Note: using sliders on the CAS could help with this question.

Question 18

Using the following known product-to-sum identity:

$$2\sin(x)\cos(y) = \sin(x+y) + \sin(x-y)$$

We can deduce that:

$$2\sin(3\theta)\cos(2\theta) = \sin(3\theta + 2\theta) + \sin(3\theta - 2\theta)$$
$$2\sin(3\theta)\cos(2\theta) = \sin(5\theta) + \sin(\theta)$$

Multiply both sides by $\frac{3}{2}$:

$$3\sin(3\theta)\cos(2\theta) = \frac{3}{2}\left(\sin(5\theta) + \sin(\theta)\right)$$

The answer is A.

Note: if the above product-to-sum identity is not known (although it is highly recommended it be in your bound reference), it can be derived from the compound angle formulas as follows:

$$\sin(x+y) = \sin(x)\cos(y) + \cos(x)\sin(y) \quad .....(1)$$
$$\sin(x-y) = \sin(x)\cos(y) - \cos(x)\sin(y) \quad .....(2)$$

Adding equations (1) and (2) together:

$$\sin(x+y)+\sin(x-y)=2\sin(x)\cos(y)$$

Which can then be used to determine the answer in the same way.

Question 19

A Type I error is when we reject the null hypothesis when it is in fact true, or in other words, accept the alternative hypothesis when we should not. In this situation, this means we conclude that the new drug is more effective when in fact it is not.

The answer is C.

Question 20

The 95% confidence interval given is (4.55, 6.43). Using the formula sheet, this is equivalent to $\left(\bar{x}-z\frac{s}{\sqrt{n}},\bar{x}+z\frac{s}{\sqrt{n}}\right)$.

The centre of the confidence interval is $\bar{x}$, which is equal to $\frac{4.55+6.43}{2}=5.49$.

Therefore $z\frac{s}{\sqrt{n}}$ is equal to 5.49 – 4.55 = 0.94.

For a 95% confidence interval, z = 1.96 (to two decimal places).

This gives us $0.94=1.96\times\frac{s}{\sqrt{n}}$.

$\therefore \frac{s}{\sqrt{n}}=0.4796$.

Given we are looking at the same sample and only changing the confidence interval, the value of $\frac{s}{\sqrt{n}}$ does not change.

For a 99% confidence interval, z = 2.58 (to two decimal places).

Therefore our 99% confidence interval $=\left(5.49-2.58\frac{s}{\sqrt{n}},5.49+2.58\frac{s}{\sqrt{n}}\right)$

$=(5.49-2.58\times0.4796,5.49+2.58\times0.4796)$

$=(4.25,6.73)$

The answer is C.

SECTION B

Question 1 (11 marks)

a.

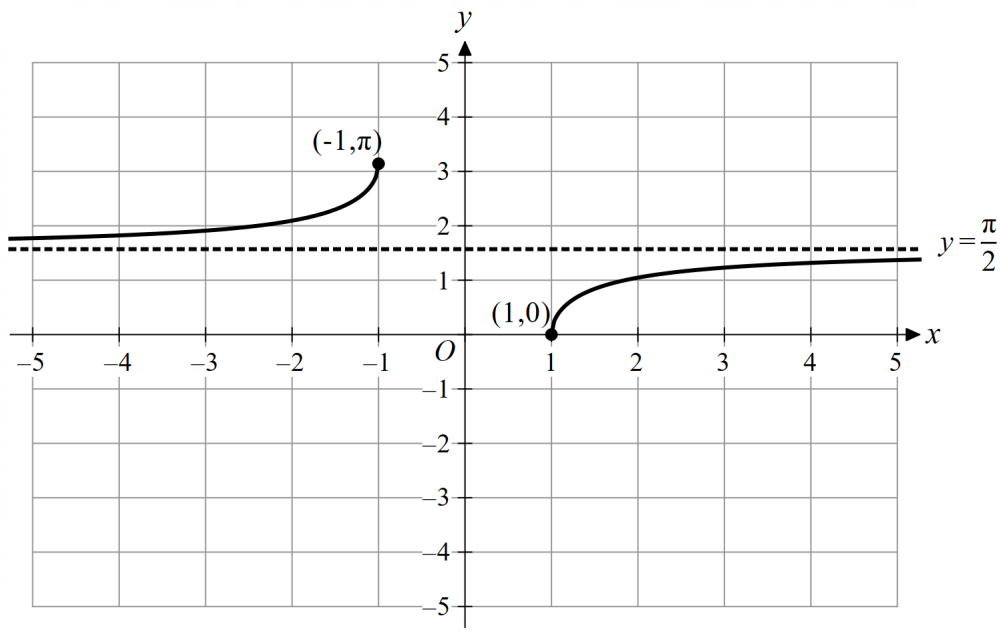

Point A has coordinates $(-1,\pi)$. Point B has coordinates $(1,0)$.

$\lim\limits_{x\to\pm\infty}\cos\left(\frac{1}{x}\right)=\cos(0)=\frac{\pi}{2}$, therefore asymptote is the horizontal line $y=\frac{\pi}{2}$.

(1 mark) – two points
(1 mark) – asymptote with equation

b. Domain of f is $x\in(-\infty,-1]\cup[1,\infty)$ or $x\in R\setminus(-1,1)$.

Range of f is $y\in[0,\pi]\setminus\left\{\frac{\pi}{2}\right\}$ or $y\in\left[0,\frac{\pi}{2}\right)\cup\left(\frac{\pi}{2},\pi\right]$.

(1 mark) – both correct

c. **i.** Let $y = \cos^{-1}\left(\frac{1}{x}\right)$.

Let $u = \frac{1}{x}$ therefore $y = \cos^{-1}(u)$.

$\therefore \frac{du}{dx} = \frac{-1}{x^2}$ and $\frac{dy}{du} = \frac{-1}{\sqrt{1-u^2}}$

Using the chain rule, $\frac{dy}{dx} = \frac{dy}{du} \times \frac{du}{dx}$,

$$\frac{dy}{dx} = \frac{-1}{\sqrt{1-u^2}} \times \frac{-1}{x^2}$$

$$= \frac{1}{x^2\sqrt{1-\left(\frac{1}{x}\right)^2}}$$ with u replaced with $\frac{1}{x}$

(1 mark) – correct substitution into chain rule

$$\frac{dy}{dx} = \frac{1}{x^2\sqrt{1-\frac{1}{x^2}}}$$

$$= \frac{1}{x^2\sqrt{\frac{1}{x^2}\left(x^2-1\right)}}$$

$$= \frac{1}{\frac{x^2}{|x|}\sqrt{x^2-1}}$$ as $\sqrt{x^2} = |x|$

$$= \frac{1}{|x|\sqrt{x^2-1}}$$

(1 mark) – show that

ii. Domain of $f'(x)$ is $x \in (-\infty, -1) \cup (1, \infty)$. **(1 mark)**

Range of $f'(x)$ is $y \in (0, \infty)$. **(1 mark)**

d. **i.** We can rewrite $g(x)=\cos^{-1}\left(\frac{ax+1}{x}\right)$ as $g(x)=\cos^{-1}\left(a+\frac{1}{x}\right)$.

As $x\to\pm\infty$, $\frac{1}{x}\to 0$, $\therefore g(x)\to\cos^{-1}(a)$.

And $\cos^{-1}(a)$ only defined for $-1\le a\le 1$, therefore the graph of $g(x)$ will have a horizontal asymptote for $-1\le a\le 1$.

(1 mark)

ii. Given $g(x)=\cos^{-1}\left(a+\frac{1}{x}\right)$, if $a\le -1$, the function can only be defined provided $x>0$. Other values of a lead to negative x values being possible.

$\therefore a\le -1$.

(1 mark)

Note: The use of the slider on the CAS is helpful for both parts in **d.** – it is recommended students become familiar with the slider use and settings involved with its use.

e. Given $\cos^{-1}(x)$ is defined for $-1\le x\le 1$, we can solve $\frac{ax+1}{x}=-1$ and $\frac{ax+1}{x}=1$ to find the x-values of the coordinates of the endpoints in terms of a.

$$\begin{aligned}\frac{ax+1}{x}&=-1\\ ax+1&=-x\\ ax+x&=-1\\ x(a+1)&=-1\\ x&=\frac{-1}{a+1}\end{aligned}\qquad\text{and}\qquad\begin{aligned}\frac{ax+1}{x}&=1\\ ax+1&=x\\ ax-x&=-1\\ x(a-1)&=-1\\ x&=\frac{-1}{a-1}\end{aligned}$$

(1 mark – finding *x*-values of endpoints in terms of *a*)

Note: the above can quickly be found using the CAS.

Regardless of the x-coordinate of the endpoint, the y-values will always be 0 and π.

When $\frac{ax+1}{x}=-1$, $\cos^{-1}(-1)=\pi$ and when $\frac{ax+1}{x}=1$, $\cos^{-1}(1)=0$.

Hence, the endpoints of the graph are $\left(\frac{-1}{a+1},\pi\right)$ and $\left(\frac{-1}{a-1},0\right)$.

Therefore, the distance between the two endpoints is

$$d = \sqrt{(\pi - 0)^2 + \left(\frac{-1}{a+1} - \frac{-1}{a-1}\right)^2}\ .$$

Solve $d = 5$ for a on the CAS yields four solutions:

$a = \pm 0.697, \pm 1.231$

(1 mark – all four correct answers)

The graphs below show two of these solutions as an example.

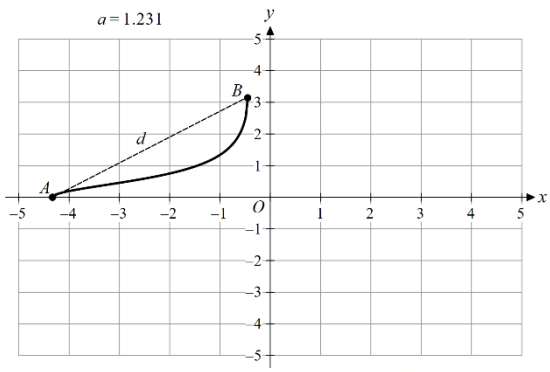

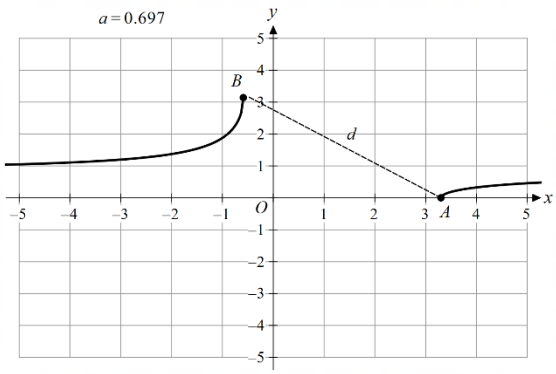

Question 2 (10 marks)

a. U is a circle with a centre at the origin and a radius of four. **(1 mark)**

b. The line L has $\text{Arg}(z) = \tan^{-1}\left(-\frac{\sqrt{3}}{3}\right)$. Given L is in the second quadrant (as $x < 0$),

$\text{Arg}(z) = \frac{5\pi}{6}$.

$\therefore \alpha = \frac{5\pi}{6}$ **(1 mark)**

c. $|z+1-\sqrt{3}i| = |z-\beta|$ can be rewritten as $|z-(-1+\sqrt{3}i)| = |z-\beta|$. This means L is the perpendicular bisector of the complex numbers $-1+\sqrt{3}i$ and β.

Given gradient of L is $-\frac{\sqrt{3}}{3}$, the gradient of the line joining $-1+\sqrt{3}i$ and β is $\sqrt{3}$, the Cartesian equation of line joining the two points $-1+\sqrt{3}i$ and β is of the form $y = \sqrt{3}x + c$ as the two lines must be perpendicular. Substituting in the point $(-1, \sqrt{3})$ to find c:

$$\sqrt{3} = \sqrt{3} \times -1 + c$$
$$c = 2\sqrt{3}$$
$$\therefore y = \sqrt{3}x + 2\sqrt{3}$$

Using the CAS, we can find the point of intersection of L and $y = \sqrt{3}x + 2\sqrt{3}$, which is $\left(-\frac{3}{2}, \frac{\sqrt{3}}{2}\right)$. This point is the midpoint of $-1+\sqrt{3}i$ and β.

Using the fact that the midpoint of two points (x_1, y_1) and (x_2, y_2) is $\left(\frac{x_1+x_2}{2}, \frac{y_1+y_2}{2}\right)$, we have $\left(\frac{-1+x_2}{2}, \frac{\sqrt{3}+y_2}{2}\right) = \left(-\frac{3}{2}, \frac{\sqrt{3}}{2}\right)$.

This gives $x_2 = -2$ and $y_2 = 0$.

Therefore the complex number $\beta = -2 + 0i$. **(1 mark)**

Note: solution shown diagrammatically on the next page.

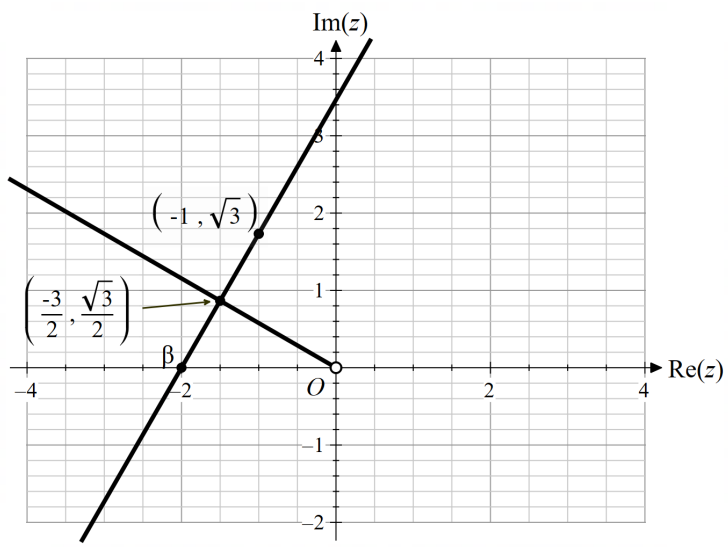

d.

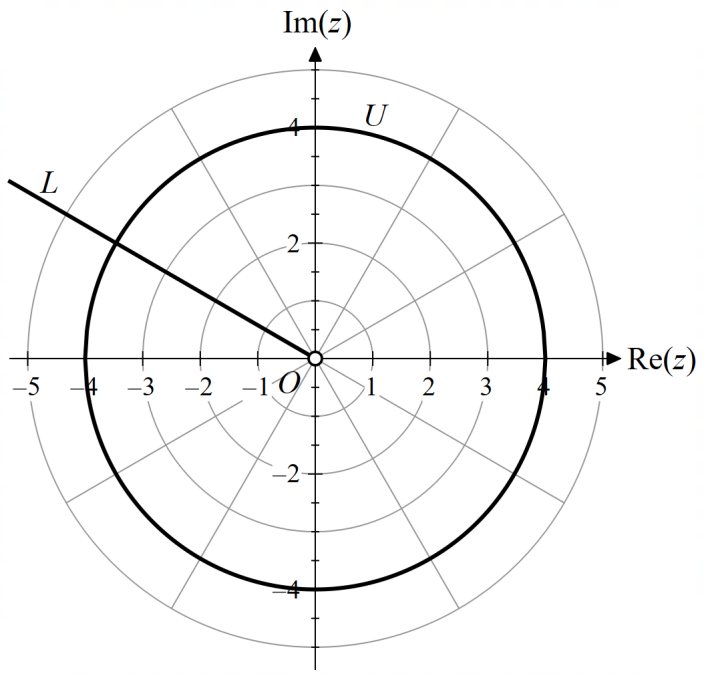

(1 mark) – correct circle U
(1 mark) – correct line L including open circle at origin

e. The area required is shown below:

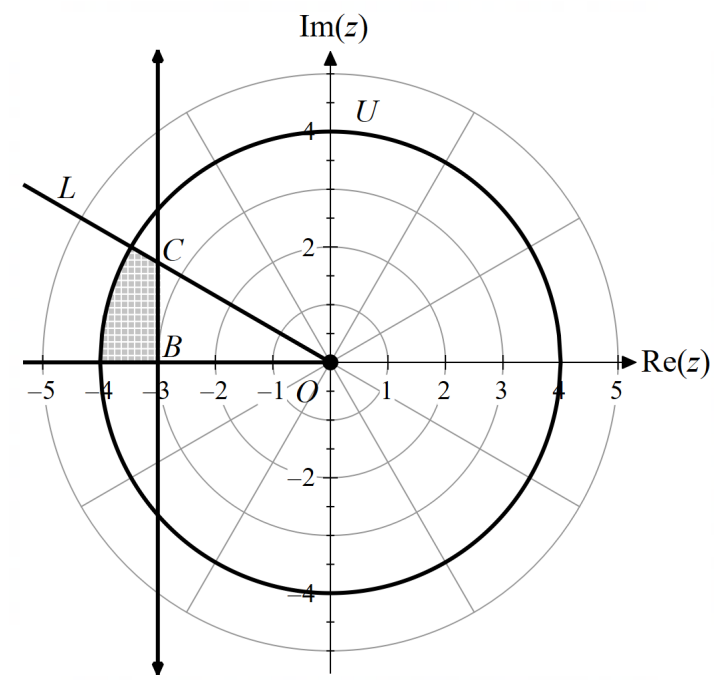

The sector formed by the line L and the circle U is $\frac{1}{12}$ fraction of the circle, hence its area is $\frac{1}{12}\times\pi\times 4^2=\frac{4\pi}{3}$ units^2. **(1 mark)**

The point C above is found by substituting in $x=-3$ into $y=-\frac{\sqrt{3}}{3}x$. This gives C as $\left(-3,\sqrt{3}\right)$. This means the height of the triangle OBC is $\sqrt{3}$.

$\therefore$ The triangle OBC above has an area $\frac{1}{2}\times 3\times\sqrt{3}=\frac{3\sqrt{3}}{2}$ units^2.

Hence, the shaded area = $\frac{4\pi}{3}-\frac{3\sqrt{3}}{2}=\frac{8\pi-9\sqrt{3}}{6}$ units^2.

(1 mark) – either form of answer OK

f. Given $W = \left\{ z : 2 < |z| < 4 \text{ and } 0 < \text{Arg}(z) \le \frac{\pi}{4}, z \in C \right\}$, this corresponds to the area between circles of radius 2 and 4, and the parts of these circles where the argument is $0 < \text{Arg}(z) \le \frac{\pi}{4}$, as shown below.

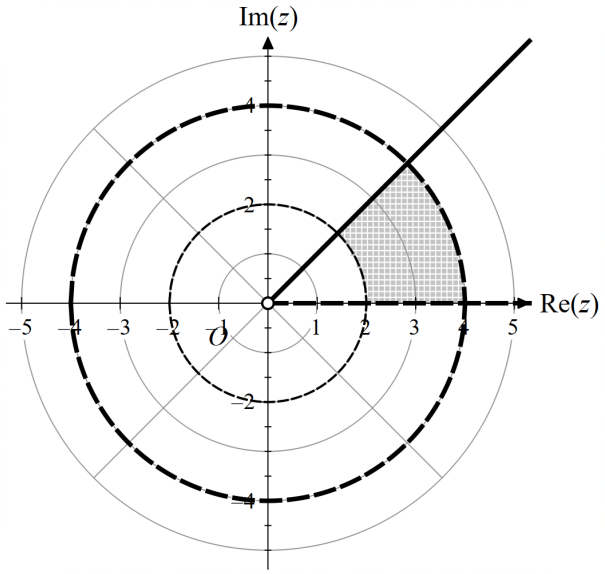

(1 mark) – circles correct with correct dotted lines
(1 mark) – rays correct with correct dotted/solid lines and shaded area correct

g. <u>Method 1</u>
From inspection of the shaded area found in **f.**, the solutions are $z = 2 + i$, $z = 2 + 2i$, $z = 3 + i$ and $z = 3 + 2i$.

(1 mark)

<u>Method 2</u>
Given it is quadrant one, we know $a > 0$ and $b > 0$.

Given also $2 < |z| < 4$, this means:

$$2 < |a + bi| < 4$$
$$2 < \sqrt{a^2 + b^2} < 4$$
$$4 < a^2 + b^2 < 16$$

Also given $0 < \text{Arg}(z) \le \frac{\pi}{4}$, this means:

$$0 < \tan(\text{Arg}(z)) \le 1$$
$$0 < \frac{b}{a} \le 1$$

Create a table to check possible integer values for a and b:

a	b	a^2+b^2	$0<\frac{b}{a}\le 1$	$4<a^2+b^2<16$
1	2	5	no	yes
2	1	5	yes	yes
2	2	8	yes	yes
3	1	10	yes	yes
3	2	13	yes	yes
3	3	18	yes	no
4	1	17	yes	no

From the above table, we can see that there are four rows where both the last two are 'yes'.

These correspond to the complex numbers $z=2+i$, $z=2+2i$, $z=3+i$ and $z=3+2i$.

(1 mark)

Question 3 (10 marks)

a. Given $x = t^2 + 4$,

$x - 4 = t^2$

$\therefore t = \pm\sqrt{x-4}$

Substitute into $y = 3t$:

$y = \pm 3\sqrt{x-4}$ **(1 mark)**

Domain is $x \in [4, \infty)$. **(1 mark)**

Note: accept $x = \left(\frac{y}{3}\right)^2 + 4$ if student has chosen to make x the subject.

b. $\frac{dx}{dt} = 2t$ and $\frac{dy}{dt} = 3$.

Using the arc length formula given on the formula sheet:

$$\int_{t_1}^{t_2} \sqrt{\left(\frac{dx}{dt}\right)^2 + \left(\frac{dy}{dt}\right)^2}\ dt$$

The length of the curve = $\int_0^4 \sqrt{(2t)^2 + 3^2}\ dt$

= 20.93 cm

(1 mark)

c. Using the formula sheet, the curved surface area can be found using the parametric equations:

$$SA = \int_{t_1}^{t_2} 2\pi x \sqrt{\left(\frac{dx}{dt}\right)^2 + \left(\frac{dy}{dt}\right)^2}\ dt$$

$$= \int_0^4 2\pi(t^2 + 4)\sqrt{(2t)^2 + 3^2}\ dt$$

$$= 1431.77 \text{ cm}^2$$

(1 mark – correct curved surface area)

Given $t \in [0, 4]$, the curve ends up as the part of $y = \pm 3\sqrt{x-4}$ in the first quadrant, that is, $y = 3\sqrt{x-4}$. When sketched, as shown below, we end up with two circular ends that need to be considered when calculating the total surface area.

Area top circle = $\pi \times 20^2$ and the area of the bottom circle = $\pi \times 4^2$.

Therefore the total surface area = $1431.774 + 400\pi + 16\pi = 2738.68 \text{ cm}^2$.

(1 mark)

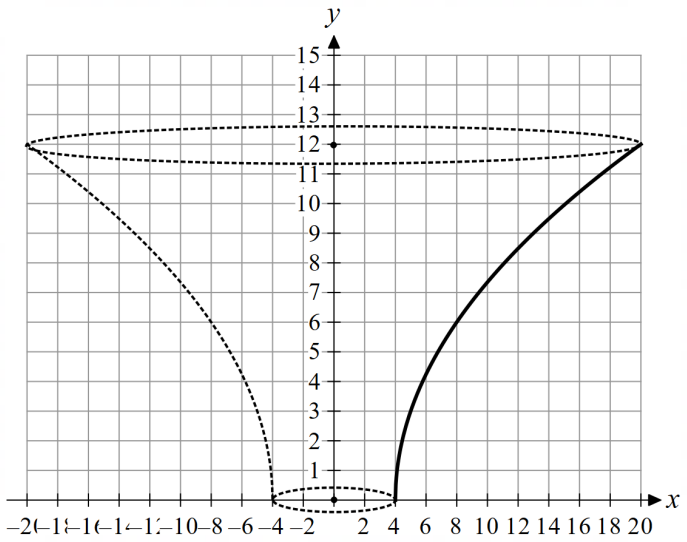

d.

$$V = \pi \int_0^h \left(\frac{y^2}{9} + 4 \right)^2 dy$$

$$= \left(\frac{h^5}{405} + \frac{8h^3}{27} + 16h \right) \pi = \frac{h(h^4 + 120h^2 + 6480)\pi}{405} \text{ cm}^3$$

(1 mark)

e. Note: given t is used earlier in the question in given parametric equations, r is used in the question and in these solutions to distinguish between the two variables.

Given $\frac{dV}{dr} = 400$ and differentiating $V = \left(\frac{h^5}{405} + \frac{8h^3}{27} + 16h \right) \pi$ with respect to h

gives $\frac{dV}{dh} = \left(\frac{h^4 + 72h^2 + 1296}{81} \right) \pi = \left(\frac{h^2}{9} + 4 \right)^2 \pi$.

Using the chain rule, $\frac{dV}{dr} = \frac{dV}{dh} \times \frac{dh}{dr}$,

$$\therefore \frac{dh}{dr} = \frac{400}{\left(\frac{h^4 + 72h^2 + 1296}{81} \right) \pi}$$

$$= \frac{32400}{\left(h^4 + 72h^2 + 1296 \right) \pi}$$

(1 mark = differentiate V and attempt to put into chain rule)

Substituting in $h = 5$,

$$\frac{dh}{dr} = 2.77$$

Therefore, the height of the water is increasing at 2.77 cm/second when $h = 5$.

(1 mark)

f. **i.** If $\frac{dV}{dr} = 200r$, then

$$\frac{dh}{dr} = \frac{200r}{\left(\frac{h^4 + 72h^2 + 1296}{81}\right)\pi}.$$

$$= \frac{200r \times 81}{\left(h^4 + 72h^2 + 1296\right)\pi}$$

<u>Method 1</u>

A differential equation solver on the CAS is encouraged to be used for this question from this point with initial condition $h = 0$ when $t = 0$:

$$\therefore r = \sqrt{\frac{\pi}{8100}\left(\frac{h^5}{5} + 24h^3 + 1296h\right)}$$

$$= \frac{\sqrt{5(h^5 + 120h^3 + 6480h)\pi}}{450} \qquad t \geq 0.$$

Note: other forms of the answer are acceptable depending on the method/CAS used.

<u>Method 2</u>
Using separation of variables, we obtain

$$\frac{\pi}{81}\int h^4 + 72h^2 + 1296\, dh = \int 200r\ dr$$

Integrating both sides:

$$\frac{\pi}{81}\left(\frac{h^5}{5} + 24h^3 + 1296h\right) = 100r^2 + c$$

Given the glass is initially empty, $h = 0$ when $r = 0$, $\therefore c = 0$.

$$\frac{\pi}{81}\left(\frac{h^5}{5}+24h^3+1296h\right)=100r^2$$

$$\frac{\pi}{8100}\left(\frac{h^5}{5}+24h^3+1296h\right)=r^2$$

$$\therefore r=\sqrt{\frac{\pi}{8100}\left(\frac{h^5}{5}+24h^3+1296h\right)}$$

$$=\frac{\sqrt{5(h^5+120h^3+6480h)\pi}}{450} \qquad r\geq 0.$$

(1 mark)

ii. Substituting in $h = 12$ for a full glass,

time = 6.44 seconds.

(1 mark)

Question 4 (9 marks)

a. Re-writing the given logistic differential equation by taking out a common factor of 4 gives $\frac{dN}{dt} = 0.2N\left(1 - \frac{N}{10\,000}\right)$.

When in this form, the maximum number infected people in the town can be read from the equation and is 10 000.

(1 mark)

b. $t = \int_{10}^{70} \frac{dt}{dN}\, dN + 0$ (note the 0 is not needed)

$= 9.76$ days

(1 mark) – integral written and correct value given

c. **i.** Method 1

If given a logistical differential equation in the form $\frac{dN}{dt} = 0.2N\left(1 - \frac{N}{10\,000}\right)$, many textbooks provide different forms for the solution. In the context of this problem, the solution would be of the form:

$$N = \frac{N_0 K e^{rt}}{N_0 e^{rt} + (K - N_0)}$$

where…

N_0 is the initial number of people infected = 10

r is the growth parameter = 0.2

K is the carrying capacity = 10 000

Substituting these values in, we obtain the rule:

$$N = \frac{10 \times 10\,000 e^{0.2t}}{10e^{0.2t} + (10\,000 - 10)}$$ **(1 mark)**

$$= \frac{100\,000 e^{0.2t}}{10e^{0.2t} + 9990}$$

$$= \frac{10\,000 e^{\frac{t}{5}}}{e^{\frac{t}{5}} + 999}$$ **(1 mark)**

<u>Method 2</u>
Solve the differential equation:

Note: students are encouraged to use their CAS to solve the differential equation, noting some CAS calculators struggle with obtaining the answer in the required form, hence full worked solutions are also given.

$$\begin{aligned}\frac{dN}{dt} &= 0.05N\left(4-\frac{N}{2500}\right)\\ &= 0.2N-\frac{0.05N^2}{2500}\\ &= 0.2N-\frac{N^2}{50\,000}\\ &= \frac{10\,000N-N^2}{50\,000}\end{aligned}$$

$$\begin{aligned}\therefore \frac{dt}{dN} &= \frac{50\,000}{10\,000N-N^2}\\ &= \frac{50\,000}{N(10\,000-N)}\\ &= \frac{A}{N}+\frac{B}{10\,000-N} \qquad \text{using partial fractions}\end{aligned}$$

$$\frac{50\,000}{N(10\,000-N)} = \frac{A(10\,000-N)+BN}{N(10\,000-N)}$$

$$50\,000 = A(10\,000-N)+BN$$

When $N=0$: $50\,000 = 10\,000A$
$A=5$
When $N=10\,000$: $50\,000 = 10\,000B$
$B=5$

$$\begin{aligned}\therefore t &= \int \frac{5}{N}+\frac{5}{10\,000-N}\,dN\\ &= 5\log_e(N)-5\log_e(10\,000-N)+c \qquad 0<N<10\,000\end{aligned}$$

(1 mark)

$$\frac{t-c}{5} = \log_e\left(\frac{N}{10\,000-N}\right)$$

$$Ae^{\frac{t}{5}} = \frac{N}{10\,000-N} \qquad \text{where } A=e^{-\frac{c}{5}}$$

When $t = 0$, $N = 10$

$$\therefore A = \frac{10}{9990} = \frac{1}{999}$$

$$\frac{1}{999}e^{\frac{t}{5}} = \frac{N}{10\,000 - N}$$

$$(10\,000 - N)e^{\frac{t}{5}} = 999N$$

$$10\,000e^{\frac{t}{5}} = N(999 + e^{\frac{t}{5}})$$

$$\therefore N = \frac{10\,000e^{\frac{t}{5}}}{e^{\frac{t}{5}} + 999}$$

(1 mark)

ii. $\frac{dN}{dt}$ is a maximum when $N = \frac{K}{2} = \frac{10\,000}{2} = 5000$, where K is the carrying capacity as stated in part **c.i.**

Solve $5000 = \frac{10\,000e^{\frac{t}{5}}}{e^{\frac{t}{5}} + 999}$ for t:

$t = 34.534$ days **(1 mark)**

Alternatively, solve $\frac{d^2N}{dt^2} = 0$ and solve for t.

d. **i.** $T \alpha \frac{dN}{dt}$

$T = k\frac{dN}{dt}$ where k is the constant of proportionality

When $T = 200$, $N = 2000$

$$\therefore 200 = k \times 0.05 \times 2000\left(4 - \frac{2000}{2500}\right)$$

Solve for k:

$$k = \frac{5}{8} = 0.625$$

(1 mark) – show that

ii. $T = \frac{5}{8} \times 0.05N\left(4 - \frac{N}{2500}\right)$

$= \frac{N}{32}\left(4 - \frac{N}{2500}\right)$

$= \frac{N}{8}\left(1 - \frac{N}{10\,000}\right) \qquad 1000 < N < 10\,000$

(1 mark) – either of last two lines, domain note required

e. Method 1

Given $T = \frac{N}{8}\left(1 - \frac{N}{10\,000}\right)$ and $N = \frac{10\,000e^{\frac{t}{5}}}{e^{\frac{t}{5}} + 999}$, we can replace N in the rule for T to have a rule for T in terms of t:

$$T = \frac{\frac{10\,000e^{\frac{t}{5}}}{e^{\frac{t}{5}} + 999}}{8}\left(1 - \frac{\frac{10\,000e^{\frac{t}{5}}}{e^{\frac{t}{5}} + 999}}{10\,000}\right)$$

(1 mark)

We are looking for when T is a maximum, hence we solve $\frac{dT}{dt} = 0$ for t on the CAS:

$t = 34.534...$ days

Note that testing starts when the number of people infected by the virus is 1000.

Solve for t:

$t = 23.547...$ days

Therefore, the testing rate is a maximum 34.534 – 23.547 = 10.99 days after testing begins.

(1 mark)

Method 2

Given T is proportional to $\frac{dN}{dt}$, the testing rate will be a maximum when $\frac{dN}{dt}$ is a maximum, which is the time found in part **c.ii.**

(1 mark)

And testing starts after 23.55 days (as shown above), therefore t = 10.98 days

(1 mark)

Question 5 (10 marks)

a. **i.**

$$\overrightarrow{AB} = (-1+2)\underset{\sim}{i} + (-2-1)\underset{\sim}{j} + (-4+3)\underset{\sim}{k}$$
$$= \underset{\sim}{i} - 3\underset{\sim}{j} - \underset{\sim}{k}$$
$$\overrightarrow{AC} = (-1+3)\underset{\sim}{i} + (-2-2)\underset{\sim}{j} + (-4+6)\underset{\sim}{k}$$
$$= 2\underset{\sim}{i} - 4\underset{\sim}{j} + 2\underset{\sim}{k}$$

(1 mark) – either vector correct

The cross product, $\overrightarrow{AB} \times \overrightarrow{AC}$, can be found using the cross product function on the CAS.

$$\overrightarrow{AB} \times \overrightarrow{AC} = -10\underset{\sim}{i} - 4\underset{\sim}{j} + 2\underset{\sim}{k}.$$

(1 mark)

ii. The vector $\overrightarrow{AB} \times \overrightarrow{AC} = -10\underset{\sim}{i} - 4\underset{\sim}{j} + 2\underset{\sim}{k}$ found in **a.i.** is a normal to the plane $\prod_1$.

Therefore, a Cartesian equation of the plane is of the form $-10x - 4y + 2z = k$, where $k \in R$.

Substitute into this equation either point *A*, *B* or *C* to find the value of *k*.

Substituting in point $A(1,2,4)$:

$$-10(1) - 4(2) + 2(4) = k$$

$$k = -10$$

$$\therefore -10x - 4y + 2z = -10$$

Dividing through by -2 gives

$5x + 2y - z = 5$ as required. **(1 mark)** – must show

b. Let $\underset{\sim}{n_1} = 5\underset{\sim}{i} + 2\underset{\sim}{j} - \underset{\sim}{k}$ be the vector normal to the plane $\prod_1$.
Let $\underset{\sim}{n_2} = 2\underset{\sim}{i} - \underset{\sim}{j} - \underset{\sim}{k}$ be the vector normal to the plane $\prod_2$.

Finding the angles between the two normal vectors to the planes is equivalent to finding the angle between the two planes.

Use the vector angle function on the CAS to find the acute angle θ between $\underset{\sim}{n_1}$ and $\underset{\sim}{n_2}$.

$\theta = 47.87°$, correct to two decimal places. **(1 mark)**

c. **i.** Given planes $\Pi_1 : 5x + 2y - z = 5$ and $\Pi_2 : 2x - y - z = 10$, we solve these two equations simultaneously on the CAS in terms of *x*, *y* and *z*:

$$x = \lambda,\ \ y = \frac{-3\lambda - 5}{3}\ ,\ \ z = \frac{9\lambda - 25}{3}$$ **(1 mark)**

The point where the line *L* crosses the *x*-*y* plane is when the $z = 0$, i.e. $\frac{9\lambda - 25}{3} = 0$.

$$\therefore \lambda = \frac{25}{9}$$

Substitute this value into the other equations found gives

$$x = \frac{25}{9} \text{ and } y = \frac{-3\left(\frac{25}{9}\right) - 5}{3} = -\frac{40}{9}.$$

Therefore, the coordinates of the point *D* are $\left(\frac{25}{9}, -\frac{40}{9}, 0\right)$. **(1 mark)**

Alternatively, you can substitute $z = 0$ into the two plane equations and solve simultaneously for *x* and *y*.

ii. Given the solutions to the two planes were $x = \lambda$, $y = \frac{-3\lambda - 5}{3}$, $z = \frac{9\lambda - 25}{3}$, it follows that a vector equation for the line *L* could be:

$$\underset{\sim}{L}(\lambda) = -\frac{5}{3}\underset{\sim}{j} - \frac{25}{3}\underset{\sim}{k} + \lambda\left(\underset{\sim}{i} - \underset{\sim}{j} + 3\underset{\sim}{k}\right).$$

However, this is not in the form the answer requires.

In **c.i.**, we found the point on the line *D* with coordinates $\left(\frac{25}{9}, -\frac{40}{9}, 0\right)$.

Hence, a vector equation of the line is $\underset{\sim}{L}(\lambda) = \frac{25}{9}\underset{\sim}{i} - \frac{40}{9}\underset{\sim}{j} + \lambda\left(\underset{\sim}{i} - \underset{\sim}{j} + 3\underset{\sim}{k}\right)$.

Therefore $x = \frac{25}{9}$ and $y = -\frac{40}{9}$. **(1 mark)**

d. **i.** The direction of line L is the vector $\underset{\sim}{d} = \underset{\sim}{i} - \underset{\sim}{j} + 3\underset{\sim}{k}$.
The plane Π_3 has the normal vector $\underset{\sim}{n_3} = \underset{\sim}{i} + \underset{\sim}{j} + 4\underset{\sim}{k}$.

Using the vector angle function on the CAS, the angle α between $\underset{\sim}{d}$ and $\underset{\sim}{n_3}$ is $\alpha = 31.48...°$.

However, this is not the angle between the line L and the plane, as the normal is perpendicular to the plane. Hence, we need to subtract the answer found from 90 to obtain the angle required.

Therefore, the angle between the line L and the plane Π_3
$= 90 - 31.48... = 58.52°$.

(1 mark)

ii. Given the plane $\Pi_3 : x + y + 4z = 11$ and the line
$\underset{\sim}{L}(\lambda) = \frac{25}{9}\underset{\sim}{i} - \frac{40}{9}\underset{\sim}{j} + \lambda\left(\underset{\sim}{i} - \underset{\sim}{j} + 3\underset{\sim}{k}\right)$, the point of intersection is found by substituting the parametric equations representing the line into the equation for the plane.

From L, $x = \frac{25}{9} + \lambda$, $y = -\frac{40}{9} - \lambda$ and $z = 3\lambda$.

Substituting these into the plane Π_3 gives
$\left(\frac{25}{9} + \lambda\right) + \left(-\frac{40}{9} - \lambda\right) + 4(3\lambda) = 11$.

Solving for λ:

$\lambda = \frac{19}{18}$ **(1 mark)**

Substituting this value of λ into the line L gives:

$$\underset{\sim}{L}\left(\frac{19}{18}\right) = \frac{25}{9}\underset{\sim}{i} - \frac{40}{9}\underset{\sim}{j} + \frac{19}{18}\left(\underset{\sim}{i} - \underset{\sim}{j} + 3\underset{\sim}{k}\right) = \frac{23}{6}\underset{\sim}{i} - \frac{11}{2}\underset{\sim}{j} + \frac{19}{6}\underset{\sim}{k}$$

So the point of intersection between the line L and Π_3 is $\left(\frac{23}{6}, -\frac{11}{2}, \frac{19}{6}\right)$.

(1 mark)

Question 6 (12 marks)

a. The expected value of a probability density function is $\mathrm{E}(X)=\int_{-\infty}^{\infty} xf(x)\,dx$, so in the context of this problem, $\mathrm{E}(X)=\int_{3}^{10} x\left(\frac{-9}{2450}(x-3)(x-11)+0.1\right)dx$. **(1 mark)**

Verify using the CAS that this equates to 6.605 (correct to three decimal places).

The variance of a probability density function is:

$$\begin{aligned}\mathrm{Var}(X)&=\mathrm{E}(X^2)-[\mathrm{E}(X)]^2\\&=\int_{3}^{10} x^2\left(\frac{-9}{2450}(x-3)(x-11)+0.1\right)dx\ -6.605^2\end{aligned}$$

(1 mark)

Verify using the CAS that this equates to 3.729 (correct to three decimal places).

b. The sample mean $\bar{X}$ is normally distributed, with $\mathrm{E}(\bar{X})=\mathrm{E}(X)$ and $\mathrm{sd}(\bar{X})=\frac{\mathrm{sd}(X)}{\sqrt{n}}$, where n is the sample size.

$\therefore \mathrm{E}\left(\bar{X}\right)=6.605$ and $\mathrm{sd}\left(\bar{X}\right)=\frac{\sqrt{3.729}}{\sqrt{50}}=0.273\ldots$. **(1 mark)** – both values stated

$\therefore \Pr\left(\bar{X}>7\right)=0.0740$ (correct to four decimal places) **(1 mark)**

c. Let B be the random variable for the time a person waits in the bakery,
$\therefore B:\ \mathrm{N}(12,\ 2.5^2)$

$\Pr(B>13)=0.3446$ (correct to four decimal places) **(1 mark)**

d. Method 1

For 10 customers, if their total wait time in the bakery is 135 minutes, then the average for each customer would be 13.5 minutes.

Therefore, the sample mean $\overline{B}$ is normally distributed, with $\mathrm{E}\left(\overline{B}\right)=\mathrm{E}(B)$ and $\mathrm{sd}\left(\overline{B}\right)=\dfrac{\mathrm{sd}(B)}{\sqrt{n}}$, where n is the sample size.

$\therefore \mathrm{E}\left(\overline{B}\right)=12$ and $\mathrm{sd}\left(\overline{B}\right)=\dfrac{2.5}{\sqrt{10}}=0.7905\ldots$ **(1 mark)**

$\therefore \Pr\left(\overline{B}>13.5\right)=0.0289$ (correct to four decimal places) **(1 mark)**

Method 2

Consider each of the 10 customers as independent (as stated) as $B_1, B_{2,}\ldots\ldots, B_{10}$.
Therefore we want the $\Pr(B_1+B_2+\ldots\ldots+B_{10}>135)$.

For independent, identically distributed variables, as given on the formula sheet,

$\mathrm{E}(B_1+B_2+\ldots\ldots+B_{10})=10\times 12=120$

$\mathrm{Var}(B_1+B_2+\ldots\ldots+B_{10})=10\times 2.5^2=62.5$

(1 mark) – either expected value or variance

$\therefore \mathrm{sd}(B_1+B_2+\ldots\ldots+B_{10})=\sqrt{62.5}$

$\therefore \Pr(B_1+B_2+\ldots\ldots+B_{10}>135)$ is found using normalCdf on the CAS
$=0.0289$

(1 mark)

e. Recall from part **d.** that the wait time in the bakery is the normal random variable B where $\therefore B:\ \mathrm{N}(12, 2.5^2)$

Let the time in the café be the normal random C, where $C:\ \mathrm{N}(11, 1.5^2)$.

For the probability that Brett exits the bakery before Claire exits the café, we want $\Pr(B < C)$ which is equivalent to $\Pr(B - C < 0)$.

$$\begin{aligned}\mathrm{E}(B-C) &= \mathrm{E}(B) - \mathrm{E}(C)\\ &= 12 - 11\\ &= 1\end{aligned}$$

(1 mark)

$$\begin{aligned}\mathrm{Var}(B-C) &= \mathrm{Var}(B) + (-1)^2\,\mathrm{Var}(C)\\ &= 2.5^2 + 1.5^2\\ &= 8.5\end{aligned}$$

$\therefore \mathrm{sd}(B-C) = \sqrt{8.5}$

Using normalcdf function on the CAS, $\Pr(B - C < 0) = 0.3658$. **(1 mark)**

f. <u>Method 1</u>
Let a be how much earlier Brett enters the bakery than Claire enters the café (in minutes).

For Brett to exit the bakery prior to Claire exiting the café we need $\Pr(B < C + a)$ which is equivalent to $\Pr(B - C < a)$.

To be 90% sure Brett exits first, we want $\Pr(B - C < a) = 0.9$.

We know $\mathrm{E}(B-C) = 1$ and $\mathrm{sd}(B-C) = \sqrt{8.5}$ from part **f.**
Using inverseNorm function on the CAS, we can determine the value of a such that the area to the left of it, as shown on the normal distribution below, is equal to 0.9.

Casio Classpad:
$a =$ invNorm("L", 0.9, $\sqrt{8.5}$, 1)

TI-Inspire:
$a = \mathrm{invNorm}(0.9, 1, \sqrt{8.5})$

$a = 4.74$ minutes
(correct to two decimal places)
(1 mark)

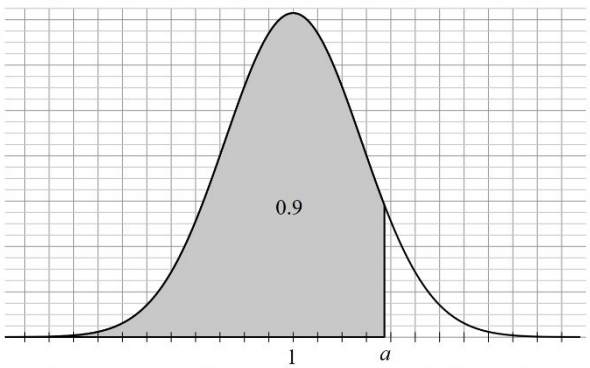

<u>Method 2</u>
If Brett goes into the Bakery a minutes earlier, then $\mathrm{E}(B - C - a) = 1 - a$.

Using the standard normal variable Z with a mean of 0 and a standard deviation of 1, the $\Pr(Z < d) = 0.9$ gives d = 1.28.

We want $\Pr(B - C - a < 0)$, so we can use $z = \dfrac{x - \mu}{\sigma}$ to determine the mean such that 0.9 probability that $B - C - a < 0$.

$$1.28 = \frac{0 - (1 - a)}{\sqrt{8.5}}$$

Solve for a:

a = 4.74 minutes **(1 mark)**